MEETING
SPACE

WRITE YOUR GREAT TITLE HERE
75%
89%

STUDY SPACE

A WONDERFUL TRAINING SEATING CHAIR

Light and breathable

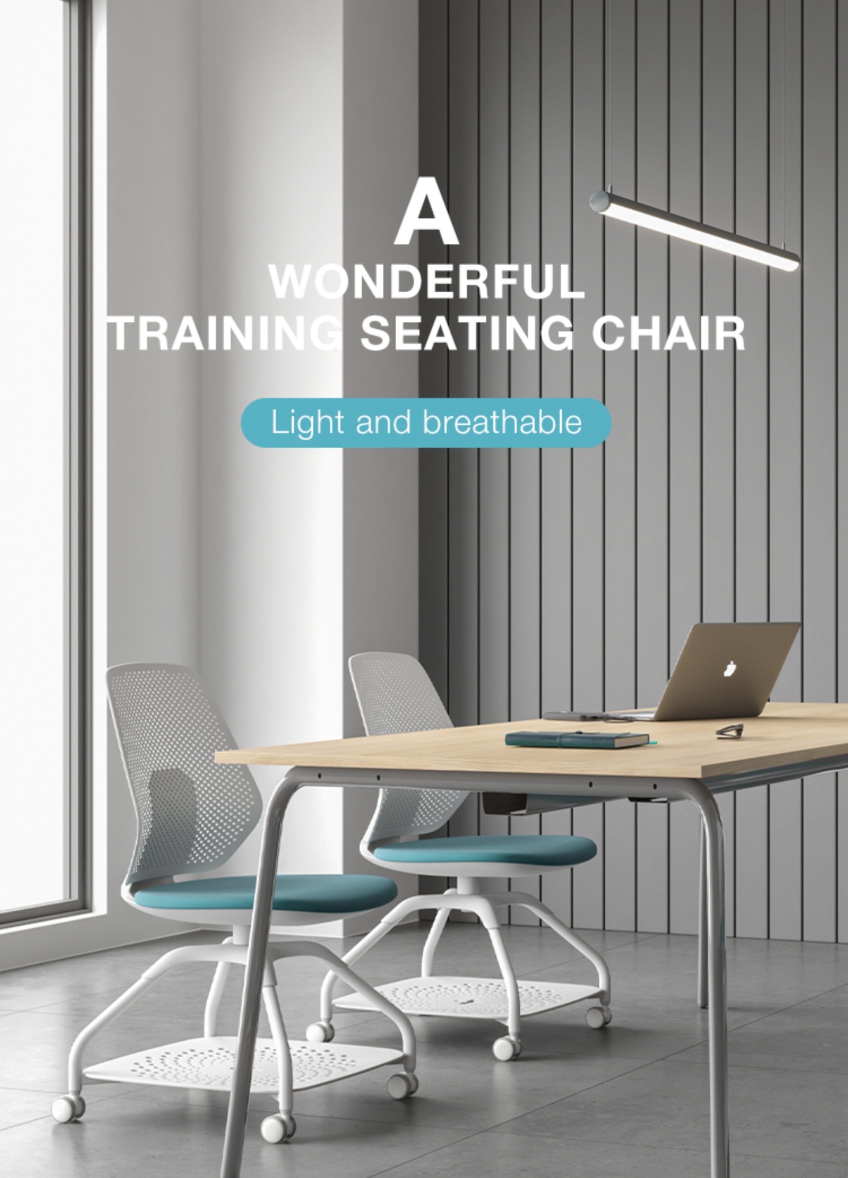

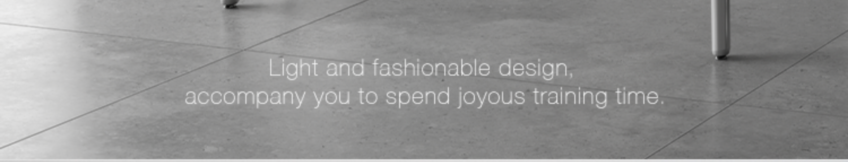
Light and fashionable design,
accompany you to spend joyous training time.

A GOOD BACKREST WITH FOUR ADVANTAGES

Backrest and seat are PP+30% glass fiber,
with strong toughness, high elasticity,
and resistance to dirt and wear.

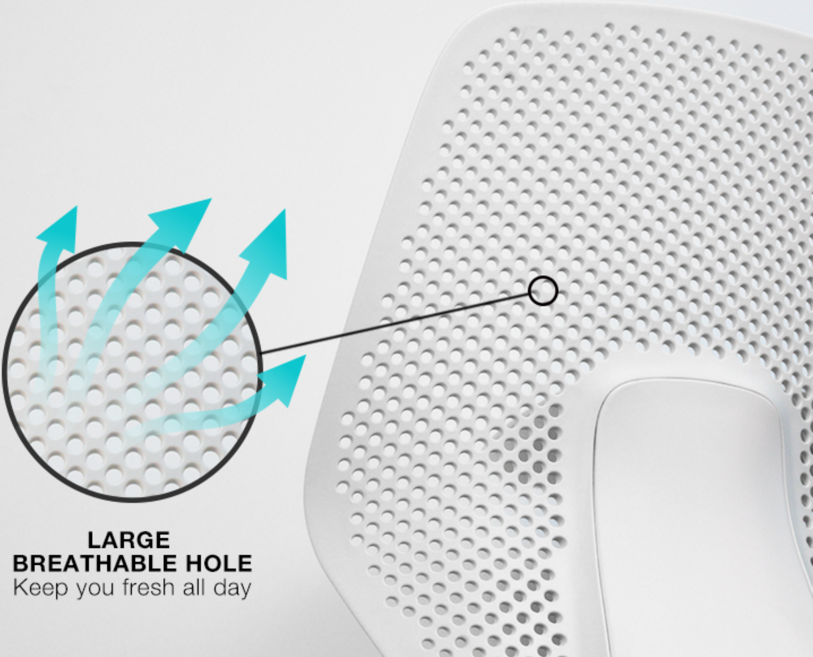
LARGE BREATHABLE HOLE
Keep you fresh all day

Lightweight **Artistically** **Breathable**

MUTE
PU CASTOR

98000 times sliding testing,
2000 times barrier testing,
102kg static loading testing,
scientific and rigorous testing ensures the quality of the casters.

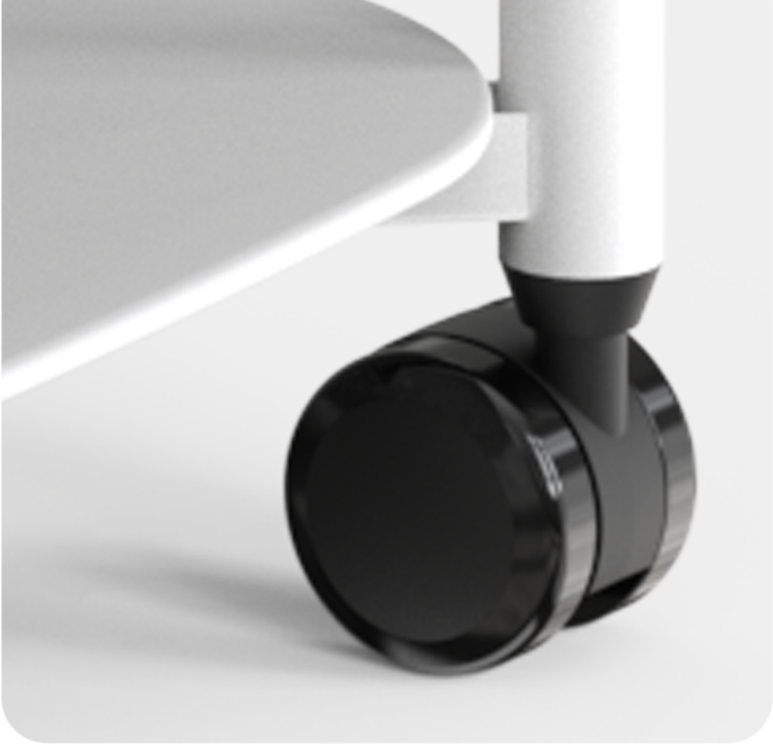

LARGE TABLET

More comfort for writing support

HONOR & COOPERATION
WE
PARTNERS
ACCOMPLISHED CUSTOMERS

HIDDEN PEN SCOOP

decorative groove design effectively prevents the pen from falling off , plays a role in storage

PP
SHELF

Easy to learn and work

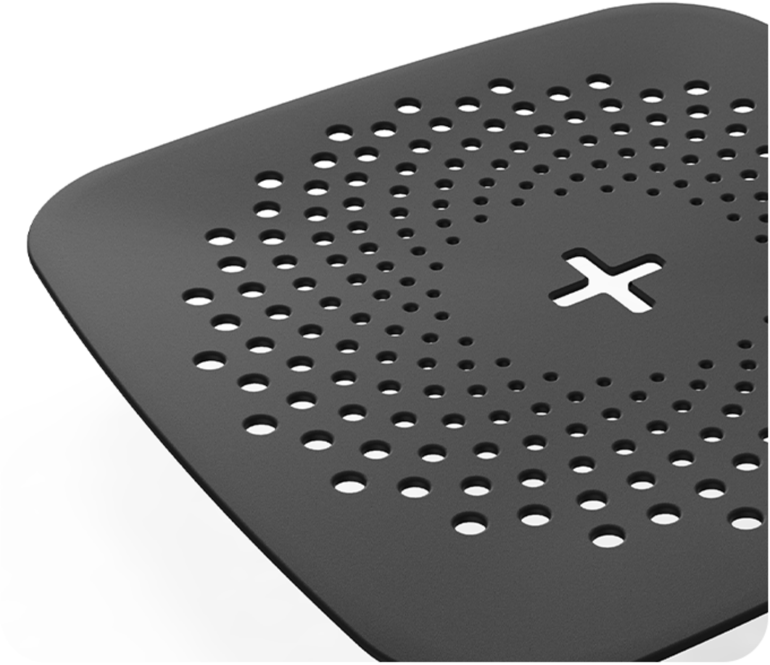

CARBON STEEL BRACKET

Base in 25*T2.0mm carbon steel with baking paint surface,
with the advantages of well finish,
strong corrosion resistance,
easy to scrub,
and moistureproof.

PACKING INFORMATION

Outer Packaging

Product size (unit: mm)
840 × 540 × 600

Seven-character Box

Inner Packaging

PE bag

Pearl Cotton

PRODUCT MATERIAL

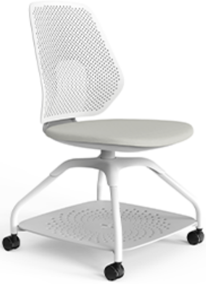

HY-823A

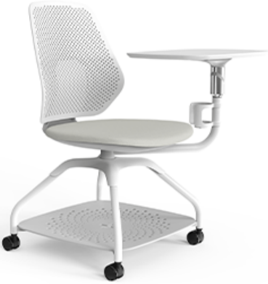

HY-823B

Product size (unit: mm)
540 × 520 × 865

Product size (unit: mm)
670 × 680 × 865

Material list

Backrest	PP+30%GF/sun pattern (black/white)
Shell	PP+30%GF/sun pattern (black/white)
Chassis	216*250*78mm 235 steel/(black/white)
Seat Cloth	TB series seat fabric (five colors)
Seat Cotton	54*53cm*T2cm cut cotton (hardness 40)
Frame	φ25*T2.0mm paint chair frame
Castors	50/25mm PU nylon universal mute castors
Shelf	PP+30%GF
Tablet	New MDF (sand white/sand black)
Cup Holder	New PP rotatable cup holder
Tablet support	φ32*T2.0mm paint writing board bracket

Frame Color Choice

○ White

● Black

Fabric Color Choice

TB001

TB002

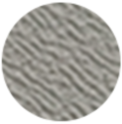
TB003

TB004

TB005

PRODUCT SIZE

HY-823A

Product size (unit: mm)
540 × 520 × 865

Front View

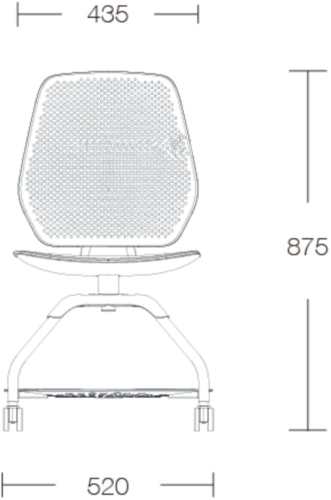

Side View

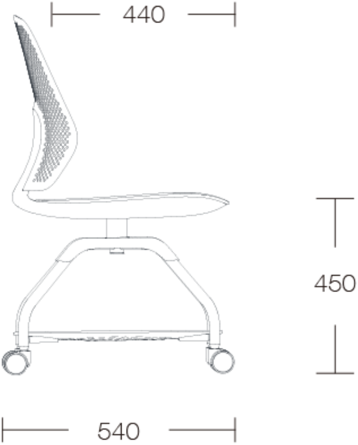

HY-823B

Product size (unit: mm)
670 × 680 × 865

Front View

Side View

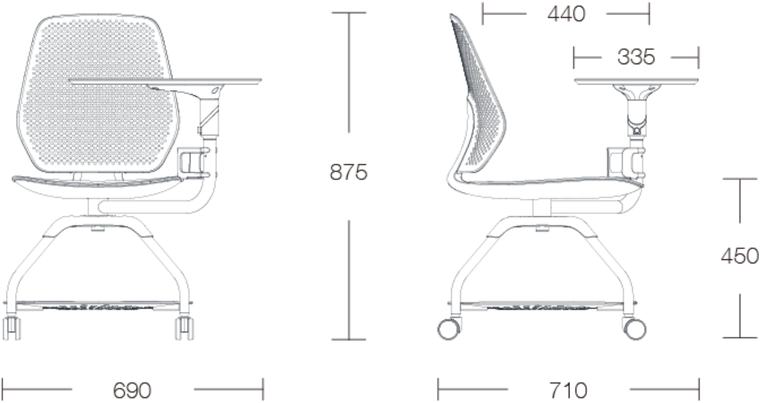

DISCLAIMER

1. Our products are sold before shipment will be in the original packaging boxes, but it is a good packing also hard to avoid possible damage in transit, to safeguard the rights and interests of buyers, please according to the parts list to sign for before unpacking check, if there is any damage should be the first time in our shop to provide contact information contact after sales commissioner, transport damage caused by the need to transport company personnel to the scene confirmed, If the buyer does not open the box and check directly sign for receipt, it means that the buyer agrees that the goods are in good condition and waives any right to investigate!

2. Our store promises that all HUY brand seats sold are original and genuine.

3. We care about customer experience, HUY provide a 5-year warranty for

all our products, and provide safety and quality assurance for all your projects

4. Most of the pictures and videos on the product description page are taken in real objects (except animation). Color difference may be caused by camera, light, Angle and computer monitor during the process.

5. HUY reserves the right of final interpretation of this product.

ERGONOMIC CHAIR BACK

The radian of the backrest fits the
curve of the human spine,
protecting the waist and spine,
allowing you to work hard in health.

ACCURATE SUPPORT
Reduce
the back
pressure

MULTIFUNCTIONAL TABLET HOLDER

360° rotating tablet, foldable
grow with you.

ONE CLICK FOLDING STORAGE

Free up space quickly and easily

360° BRACKET EMBRACE LEARNING

More comfort for writing support

ROTATABLE

CUP HOLDER

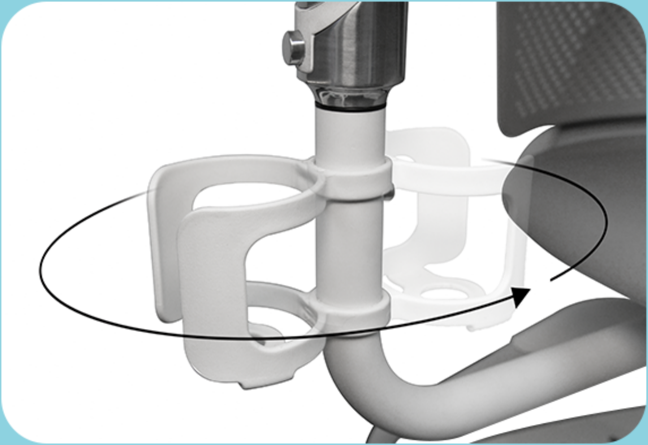Easily adjustable